QUIL

THE WHOLENESS
OF TRANQUILITY

CPF301H1H2#GR2

THERMOSTAT CONCEALED
SHOWER MIXER UNIT SET WITH
HAND SHOWER AND RAIN SHOWER

ESTELLE BLACK | TWILIGHT GOLD

PRODUCT DESCRIPTION

- Shower: Thermostat concealed shower mixer set with hand shower and rain shower.
- Dimension: 105 x 850 mm.
  (Depth x Recommended height for installation)
- Material: Brass

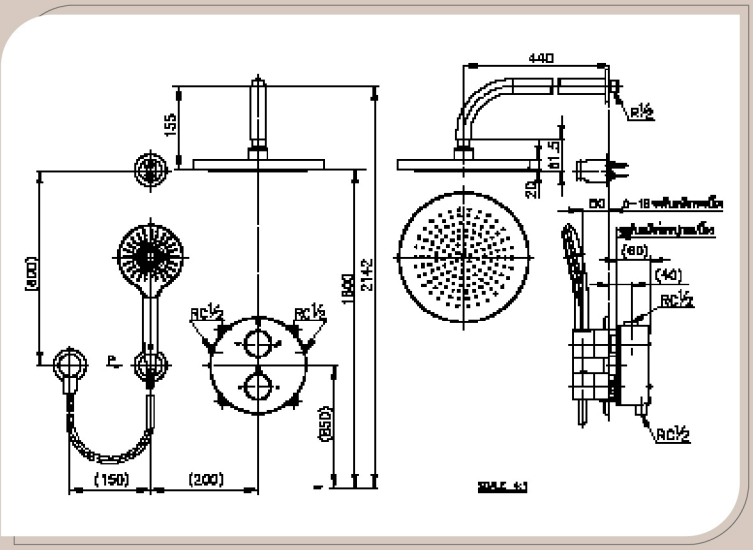

UNIQUE SELLING POINTS (USPs)

- Brass material reflects the highest quality of product
- 2 special colours to make a major premium impact and differentiate from others.
  (Twilight gold, Estelle black)
- Water temperature adjustment technology embedded in thermostat enables the temperature not to rise above 38 Celsius which may cause harmfulness to end-users.
- Water flow is silky smooth including the directions of water flow from hand and head showers are ergonomically comfortable to maximize the highest level of comfort for end-users.

PRODUCT RECOMMENDATIONS

PRODUCTS	CODE
1. Stainless floor drain/ square	CPF6403Z2P#GR2 / #BN2
2. Stainless rail floor drain (80 cms.)	CPF699Z1#GR2 / #BN2

CPF301H1H2#BN2

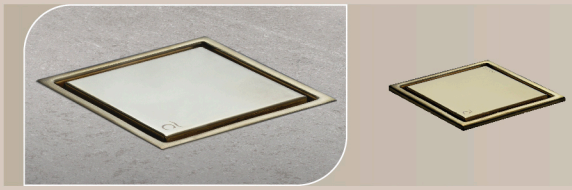

CPF6403Z2P#GR2

CPF699Z1#GR2

Siam Sanitary Ware Industry Co., Ltd.
36/11 Vibhavadi-Rangsit Rd. Sanambin Don Muang,
Bangkok 10210

Tel : 02-521-7777, 02-963-5999